EVOLUTION EDGES™
A DIVISION OF CHEMUNG SUPPLY

Innovation with an Edge™

Elmira, NY | Denver, CO

CARBIDE-FREE SOLUTION

# sabre® ARMORED STEEL BLADE

*A Premium Steel Solution Engineered for Performance and Cost Stability*

Available in 6" and 8" blade heights.

The **Sabre® Armored Steel Blade** delivers a high-performance steel alternative built on the proven Sabre platform. Featuring a fully welded 3/4" Hardox® wear plate, it provides enhanced durability, extended service life, and reliable performance for municipal and DOT fleets. Engineered for cost stability, this blade offers a premium solution in today's changing material market.

## MATERIAL PERFORMANCE

- ✓ **Extended life vs. standard steel**
- ✓ **Enhanced wear resistance**
- ✓ **2× the hardness of standard steel**
- ✓ **70% increase in tensile strength**
- ✓ **140% increase in yield strength**
- ✓ **Sectional design**

**BULLETPROOF TESTED MATERIALS**

## ENGINEERING & DESIGN

- ✓ **3/4" thick Hardox® 450 armored wear plate**
- ✓ **3/4" 1020 steel blade body**
- ✓ **Fully welded construction**
- ✓ **Increased wear plate thickness and height**
- ✓ **Integrated wear indicators**
- ✓ **Designed for safety and handling**

## COMPANY CORE CAPABILITIES

- ✓ **Snowplow cutting edges and wear parts**
- ✓ **Armored steel blade system**
- ✓ **Sabre® patented blade technology and engineering**
- ✓ **Hardox® wear plate integration**
- ✓ **Municipal and DOT supply**
- ✓ **Nationwide distribution**

## OPERATIONAL BENEFITS

- ✓ **Cost-stable alternative, not dependent on carbide**
- ✓ **Reduced material costs**
- ✓ **Lower upfront cost**
- ✓ **Reduced downtime**
- ✓ **Longer replacement intervals**
- ✓ **Fast installation and changeout**

## ABOUT EVOLUTION EDGES

Evolution Edges, a division of Chemung Supply Corporation, is a leading U.S. manufacturer and supplier of high-performance snowplow blades and wear parts.

Founded in 2009, we deliver fast, reliable service.

Acquired **Built Blades** and the patented **Sabre® Blade** in 2020.

American-made in a solar-powered production facility.

**Distribution Network:**

- **Elmira, NY** - Headquarters
- **Denver, CO** - West Coast Hub
- Faster Nationwide Shipping
- Reduced Freight Costs
- Lower Emissions

Supplier Partner NASPO ValuePoint

**SAVE TIME AND MONEY**
No-Bid Purchasing. We're an Authorized Partner for NASPO ValuePoint (Contract #47643).

2420 Corning Road
Elmira, New York 14903
800-733-5508
info@evolutionedges.com

sabre®

evolutionedges.com

EVOLUTION EDGES™
A DIVISION OF CHEMUNG SUPPLY

Innovation with an Edge™
Elmira, NY | Denver, CO

CARBIDE-FREE SOLUTION

# sabre® ARMORED STEEL BLADE

*A Premium Steel Solution Engineered for Performance and Cost Stability*

## In-Stock Inventory

### EBT-SAB-36-STL

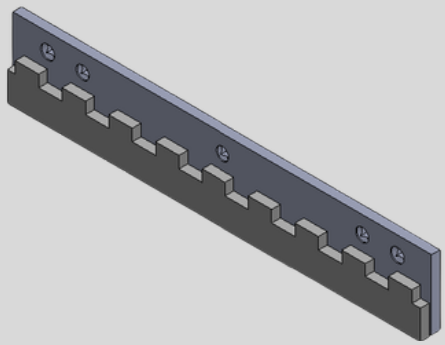

**Sabre® Armored Steel Blade**

36-Inch Length / 6-Inch Height

### EBT-SAB-48-STL

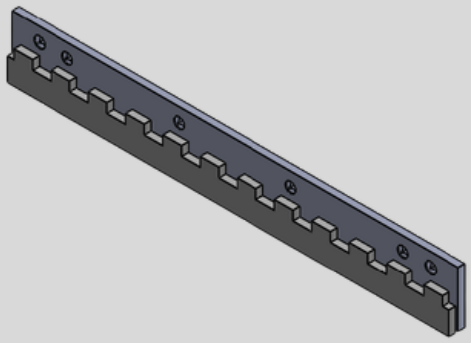

**Sabre® Armored Steel Blade**

48-Inch Length / 6-Inch Height

### EBT-SAB-36-8-STL

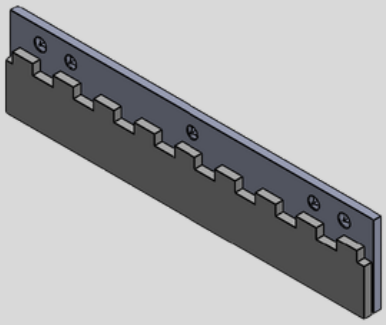

**Sabre® Armored Steel Blade**

36-Inch Length / 8-Inch Height

### EBT-SAB-48-8-STL

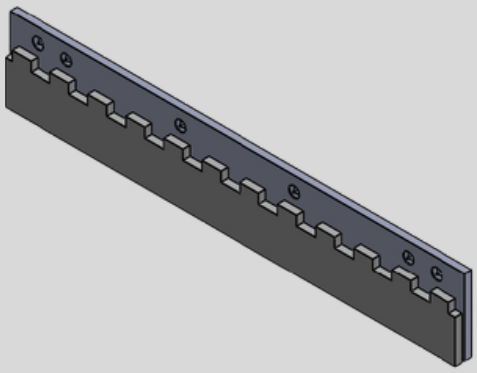

**Sabre® Armored Steel Blade**

48-Inch Length / 8-Inch Height

**SAVE TIME AND MONEY**
No-Bid Purchasing. We're an Authorized Partner for NASPO ValuePoint (Contract #47643).

2420 Corning Road
Elmira, New York 14903
800-733-5508
info@evolutionedges.com

sabre®
evolutionedges.com